RANGE HOOD **LH1-36G**

DIMENSIONS & SPECIFICATIONS

EN
English

DIMENSIONS

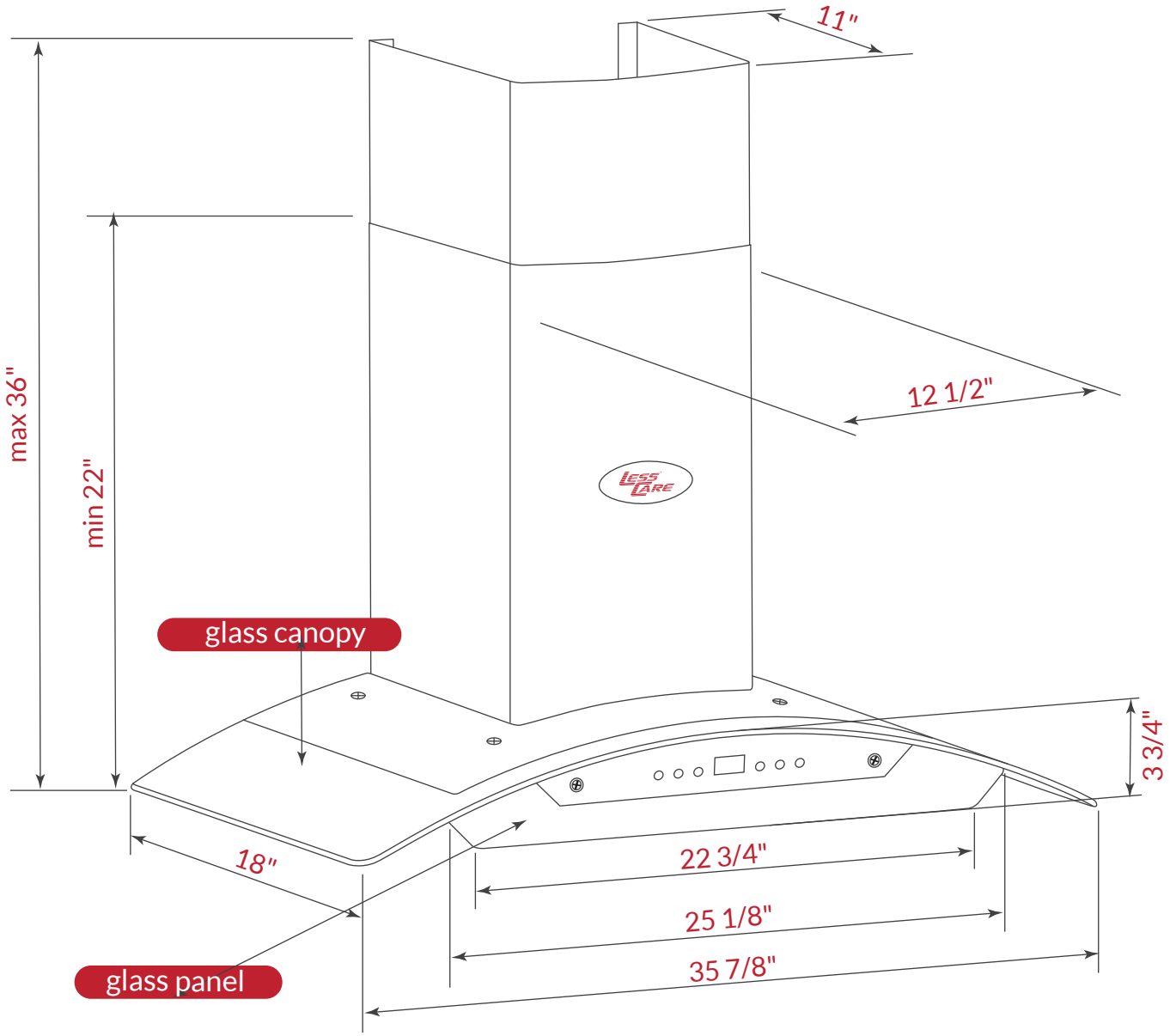

T: 215-745-7900 • F: 215-745-4575 • info@lesscare.com • P.O. Box 11670, Philadelphia, PA 19116

www.LessCare.com

(Version: 04.21.2015)